Date		Type	
Specifier		Project Name	

SAM95

Design: QUATTROBI TECHNICAL DEPARTMENT

Track adjustable projector with LED lighting system. Optical unit with front tempered glass protective screen. Complete with electronic driver. Suitable for indoor applications such as retail stores, museums and art galleries.

Lisitings: c UL us LISTED

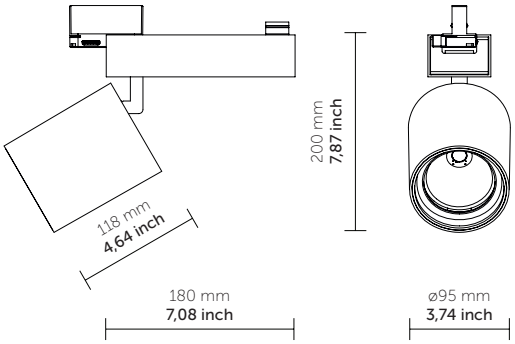

0º - 90º vertical tilting / 355º horizontal rotation

PRODUCT FEATURES

Type:	Track
Applications:	Indoor
Luminaire material:	Aluminium alloys
Protective screen:	Tempered glass
Light source:	LED
Power Supply:	Electronic constant current LED driver, 120V 60Hz
Wattage:	15, 20, 26, 35, 45
Delivered lumens:	1085 lm - 6509 lm
Color Temp:	2700K, 3000K, 3500K, 4000K
CRI:	80+, 90+, CRIMAX, F90
Dimming:	Phase cut dimming

Specification recap

Type	Item #	Quantity

*Please make sure to include fixture and any accessories.

Quattrobi Inc. 420 Columbus Ave, Ste. 304, Valhalla NY 10595 +1.347.613.5772 info@quattrobi.net
Due to the dynamic nature of lighting products and the associated technologies, luminaire data on this sheet is subject to change at the discretion of Quattrobi Inc.
© copyright Quattrobi Inc 2022

SAM95

Design: QUATTROBI TECHNICAL DEPARTMENT

Ordering info

Model	Adapter	Cri/Color	Beam	Finish	Driver/Dimmer
-----	-	----	-	--	-
SA111 15W120V **SA112** 20W120V **SA113** 26W120V **SA114** 35W120V **SA115** 45W120V	**X** Global(*) XTS compatible	**8030** 80CRI/3000K **8035** 80CRI/3500K **8040** 80CRI/4000K **9027** 90CRI/2700K **9030** 90CRI/3000K **9035** 90CRI/3500K **9730** 97CRI/3000K **CR27** CRIMAX/2700K **CR30** CRIMAX/3000K **CR35** CRIMAX/3500K **CR40** CRIMAX/4000K **F930** F90CRI/3000K **F935** F90CRI/3500K **F940** F90CRI/4000K Decor versions and other on request	**S** Spot **M** Medium **W** Wide Other on request	**01** white **02** black **18** grey Other on request	Phase cut dimming

Ordering example : **SA111 X 8030 M 01**

*For other CRI, KELVIN and other customization please contact the cunsomer service

(*) Global is a registered trade mark of Nordic Aluminium

Quattrobi Inc. 420 Columbus Ave, Ste. 304, Valhalla NY 10595 +1.347.613.5772 info@quattrobi.net
Due to the dynamic nature of lighting products and the associated technologies, luminaire data on this sheet is subject to change at the discretion of Quattrobi Inc.
© copyright Quattrobi Inc 2022

SAM95

Design: QUATTROBI TECHNICAL DEPARTMENT

Multiplying factors: (Multiplying Factor is based on 80CRI/3000K)

CCT	80CRI/3000K	80CRI/3500K	80CRI/4000K	90CRI/3000K
Factor	**1.0**	**1,035**	**1,053**	**0,847**

Wattage	15W	20W	26W
Factor	**1.0**	**1.426**	**1.596**

Photometry

8030 S 15W 3000K CRI80 13°
Lumens: 1575

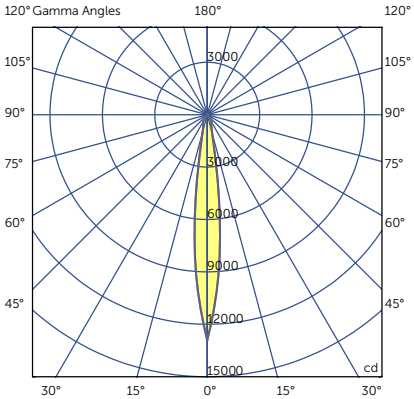

Candelas at Nadir

Deg	Candela
0	12901.19
5	8119.67
15	1073.33
25	537.78
35	365.02
45	7.13

8030 M 15W 3000K CRI80 31°
Lumens: 1575

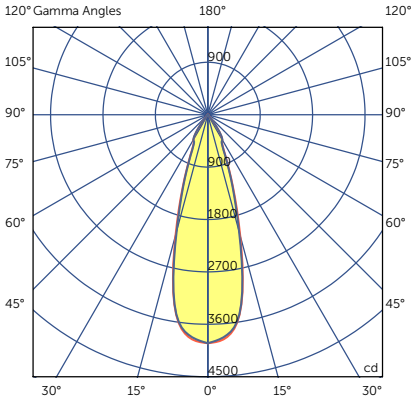

Candelas at Nadir

Deg	Candela
0	3922.74
5	3830.23
15	2146.11
25	610.79
35	300.94
45	7.64

8030 W 15W 3000K CRI80 58°
Lumens: 1575

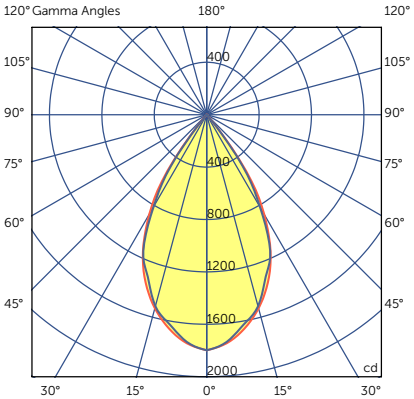

Candelas at Nadir

Deg	Candela
0	1797.54
5	1750.29
15	1529.46
25	1152.18
35	523.70
45	12.43

*Please make sure to include fixture and any accessories.

Quattrobi Inc. 420 Columbus Ave, Ste. 304, Valhalla NY 10595 +1.347.613.5772 info@quattrobi.net
Due to the dynamic nature of lighting products and the associated technologies, luminaire data on this sheet is subject to change at the discretion of Quattrobi Inc.
© copyright Quattrobi Inc 2022

SAM95

Design: QUATTROBI TECHNICAL DEPARTMENT

Multiplying factors: (Multiplying Factor is based on 80CRI/3000K)

CCT	80CRI/3000K	80CRI/3500K	80CRI/4000K	90CRI/3000K
Factor	**1.0**	**1,035**	**1,053**	**0,847**

Wattage	35W	45
Factor	**1.0**	**1.229**

Photometry

8030 S 35W 3000K CRI80 18°
Lumens: 2880

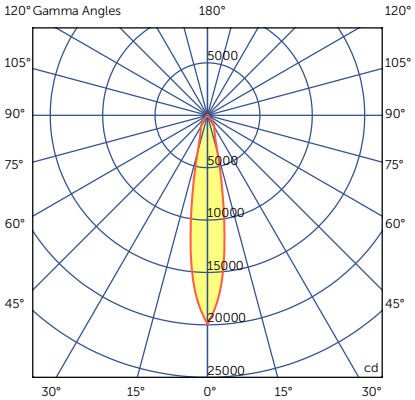

Candelas at Nadir

Deg	Candela
0	19928.94
5	15814.54
15	3721.42
25	1530.84
35	878.25
45	19.83

8030 M 35W 3000K CRI80 33°
Lumens: 2880

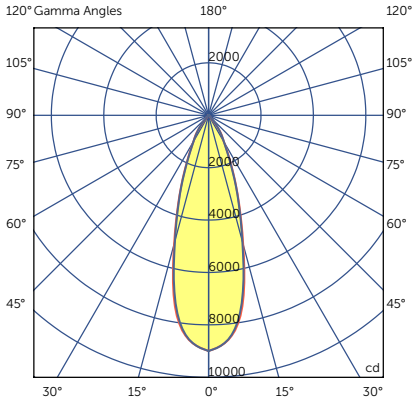

Candelas at Nadir

Deg	Candela
0	8992.62
5	8605.75
15	5095.07
25	1964.31
35	767.03
45	21.08

8030 W 35W 3000K CRI80 60°
Lumens: 2880

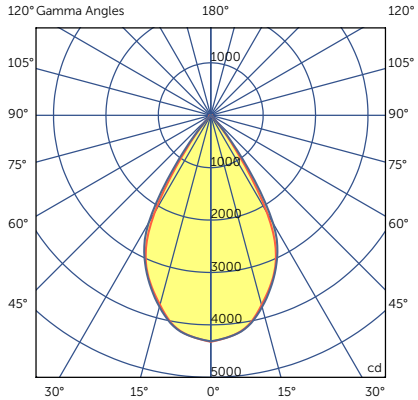

Candelas at Nadir

Deg	Candela
0	4321.61
5	4234.68
15	3744.64
25	2940.81
35	964.00
45	27.87

Quattrobi Inc. 420 Columbus Ave, Ste. 304, Valhalla NY 10595 +1.347.613.5772 info@quattrobi.net
Due to the dynamic nature of lighting products and the associated technologies, luminaire data on this sheet is subject to change at the discretion of Quattrobi Inc.
© copyright Quattrobi Inc 2022

Date		Type	
Specifier		Project Name	

quattrobi inc

TRACK
3 circuit 120V

Design: GLOBAL

Lighting track system
Low profile , modular system
High power handling capability

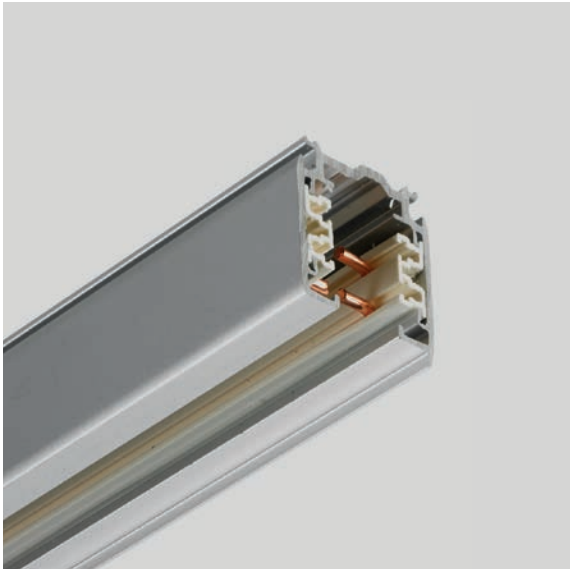

Lisitings: c UL us LISTED

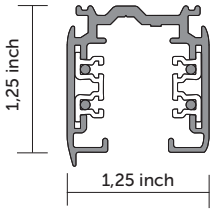

XTS

PRODUCT FEATURES

Installation	Suspended / Surface / Recessed
Luminaire housing	Extruded aluminum
Finishing	White, Grey, Black

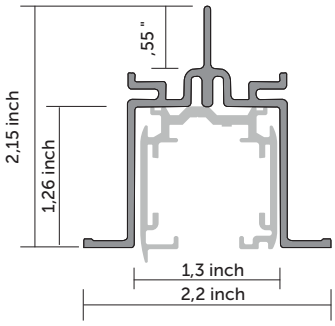

FTP

Ordering info

Model	Length	Finish	Model	Length	Finish
-----		--	-----		--
XTS44 **XTS48** **XTS412**	4'(48") 8(96") 12'(144")	**1** aluminium **2** black **3** white	**FTP44** **FTP48** **FTP412**	4'(48") 8(96") 12'(144")	**1** aluminium **2** black **3** white

Ordering example: suspended / surface **XTS44 1**

Ordering example: recessed **XTS44 1 + FTP44 2**

Quattrobi Inc. 420 Columbus Ave, Ste. 304, Valhalla NY 10595 +1.347.613.5772 info@quattrobi.net
Due to the dynamic nature of lighting products and the associated technologies, luminaire data on this sheet is subject to change at the discretion of Quattrobi Inc.
© copyright Quattrobi Inc 2022

XTS11

XTS12

XTS14

XTS34

XTS23

XTS39

XTS40

XTS38

XTS21

XTS41

SKB12

SKB34

SKB34/3

SKB30

Accessory wiring diagram

RIDGE-ON-OUTSIDE-OF-GRID

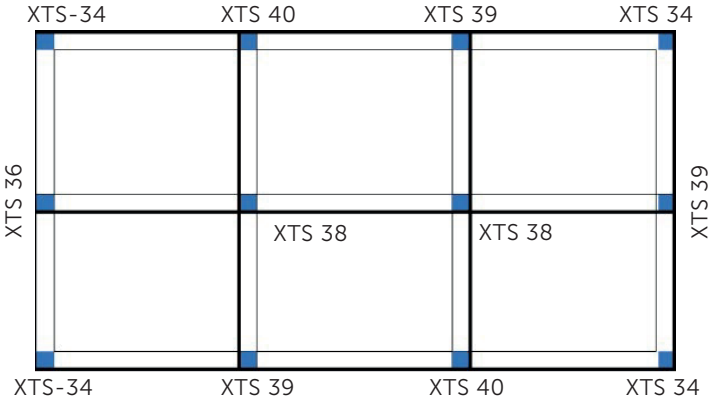

RIDGE-ON-INSIDE-OF-GRID

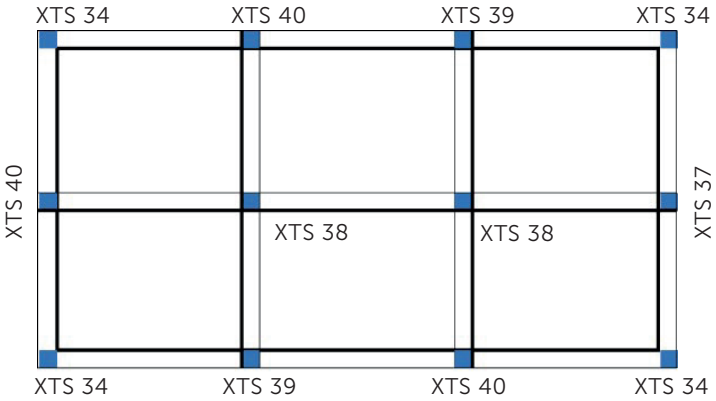

Components

Model	Finish	Aditional Accessories
-----	--	
XTS11 end feed left **XTS12** end feed right **XTS14** center feed **XTS21** straight connector **XTS23** flexible connector **XTS34** L connector adjustable **XTS38** X connector **XTS39** T connector inside **XTS40** T connector outside **XTS41** dead end **SKB30** ceiling cup **GA70** monopoint kit **FTP41** Recessed end cup	**1** aluminium **2** black **3** white	**XTSV12-1** bending tool **SKB12-1** ceiling clamp **SKB34** sospension wire 5 feet **SKB34/3** sospension wire 9 feet

Ordering example: **XTS11 2**

Quattrobi Inc. 420 Columbus Ave, Ste. 304, Valhalla NY 10595 +1.347.613.5772 info@quattrobi.net
Due to the dynamic nature of lighting products and the associated technologies, luminaire data on this sheet is subject to change at the discretion of Quattrobi Inc.
© copyright Quattrobi Inc 2022